50 SQFT GROTTO PAD DETAIL WITH ARTIFICIAL FLAT
(WITH UNDERWATER POCKETS)

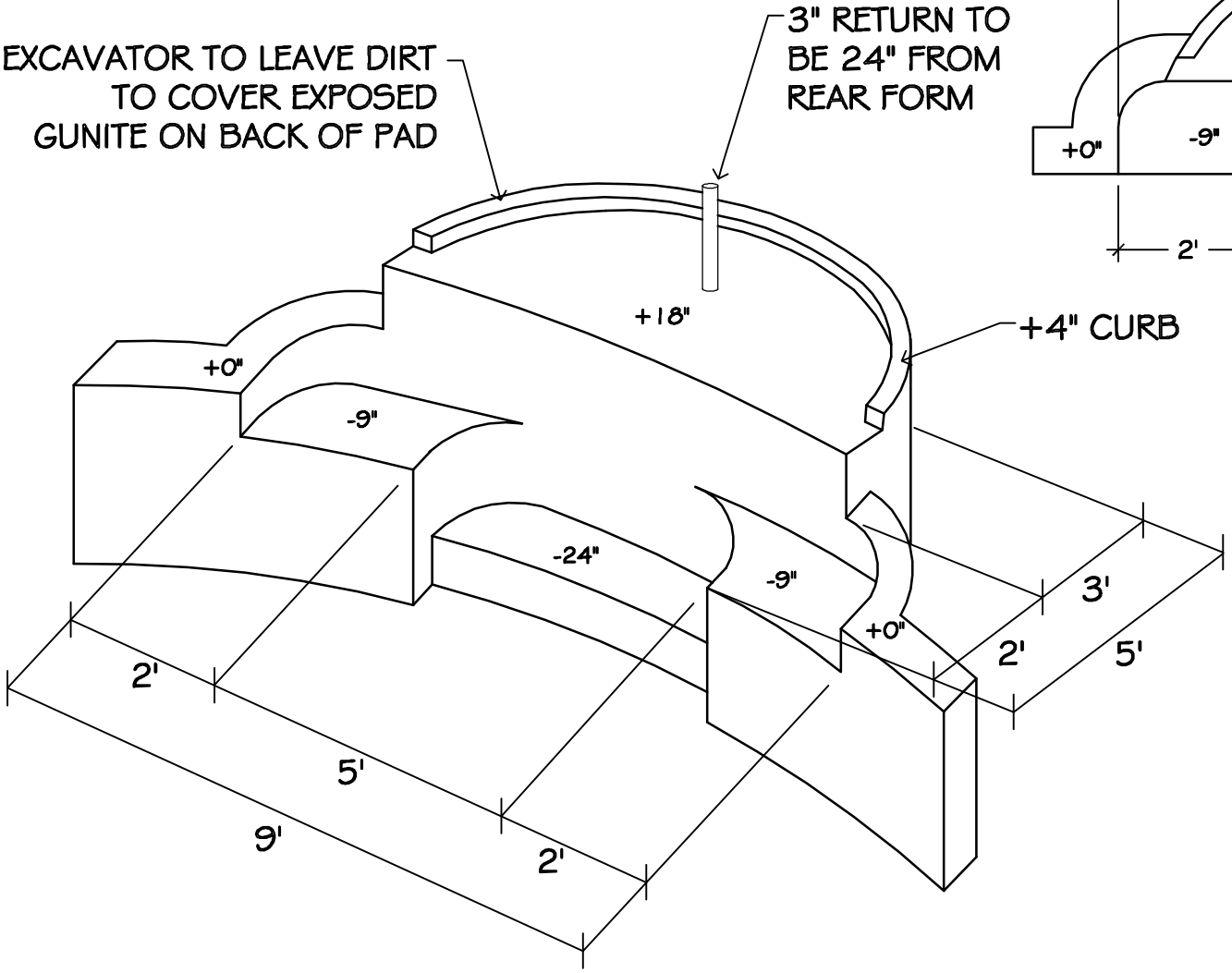

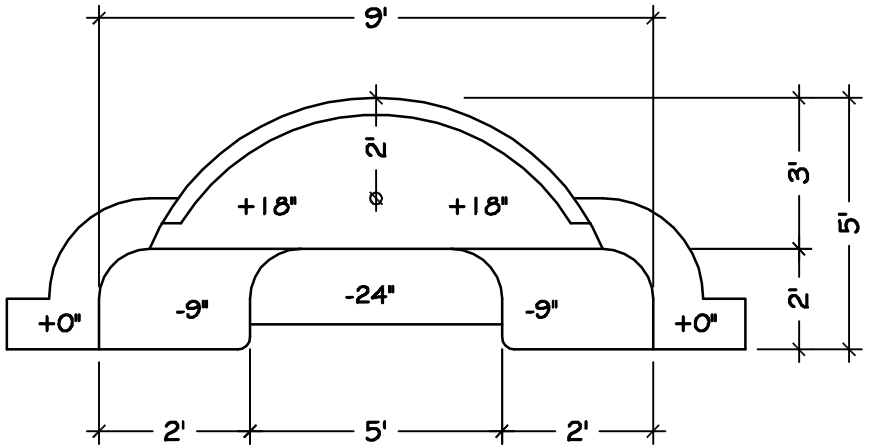

OFFICE #: (623) 780-2800
INFO@GETROCKS.COM
ROC182272

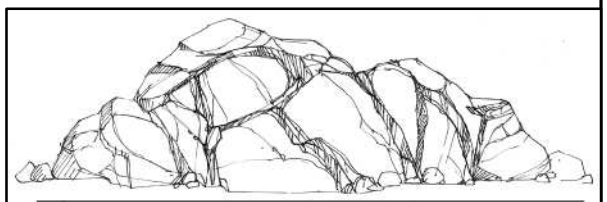

VISIT OUR ONLINE PORTFOLIO AT WWW.GETROCKS.COM